FLORIDA BUILDING CODE
ENGINEERING EVALUATION REPORT

Date	2023-09-29
File No.	0064-31-1-5916
For	Westlake Davinci Roofscapes, LLC
Address	13890 W 101 St, Lenexa, KS 66215

Subject

Westlake Davinci Province Slate Roofing.

Evaluation Scope

This report is provided to assist registered design professionals and building officials in the United States for determining compliance to the performance objectives in the named building codes. The product(s) described herein have been evaluated to the 2023 Florida Building Code (FBC) and Residential Code (FBC-R).

CSI DIVISION: 07 00 00 THERMAL AND MOISTURE PROTECTION
SUBDIVISION: 07 32 26 Plastic Roof Tiles

FBC CATEGORY: Roofing
SUB-CATEGORY: Products Introduced as a Result of New Technology

CODE SECTIONS AND STANDARDS

FBC Section	Description	Referenced Standard or Code Section[1]	Year
1504.3	Wind Resistance of Nonballasted Roofs	FBC Section 1609	-
1504.3.1	Wind Uplift Resistance (Non-HVHZ)	UL 1897	2015
1504.6[2]	Durability, Physical Properties	ASTM G155	2013
1505	Fire Classification (Non-HVHZ)	ASTM E108	2017
1515.1.3	Performance Requirements (HVHZ)	TAS 301	1994
1516.1	Fire Classification (HVHZ)	ASTM E108	2017
1523.6.5	Discontinuous Roofing Systems, Wind-driven Rain (HVHZ)	TAS 100	2023
1523.6.5.2.4.1[2]	Wind Uplift Resistance (HVHZ)	TAS 125	2003
2606.4	Burning Rate	ASTM D635	2014
2606.4	Self-Ignition Temperature	ASTM D1929	2016
2606.4	Smoke Density Rating	ASTM D2843	2016
2615.2	Weathering (HVHZ)	ASTM G155	2013
2615.2	Tensile Strength after Weathering (HVHZ)	ASTM D638	2003

FBC-R Section	Description	Referenced Standard or Code Section[1]	Year
R902.1	Fire Classification	ASTM E108	2017
R904.3	Material Specifications and Physical Characteristics	-	-
R905.1	Roof Covering Application	Table R301.2(2), R301.2(3)	-
R4402.1	Roof Assemblies and Rooftop Structures (HVHZ)	FBC Ch 15	-
R4412.1	Plastics (HVHZ)	FBC Ch 26	-

1. Only the applicable reference standards and code sections cited in the main body text are listed. (-) indicates that the main body text covers the full explanation of the objective.
2. Code section citing related roof covering performance requirements and referenced test standard.

COMPLIANCE STATEMENT

It is the opinion of Boca Engineering Co. that DaVinci Province Roof Slates, when installed as described in this report, has demonstrated compliance with the listed sections of the 2023 Florida Building Code (FBC) and Residential Code (FBC-R), inclusive of the requirements for High Velocity Hurricane Zone (HVHZ). Design and performance information can be found in the Product Evaluation section this report.

This report has been prepared and reviewed on behalf of Boca Engineering Co. by:

Christopher Bowness, P.Eng., P.E.	2023-09-29 Issue Date	12-31-2026 Expiry Date

EVALUATION REPORT TERMS

1. This report is a general evaluation of the building code section requirements as identified and applies only to the samples that were evaluated. It does not imply any endorsement or warranty, nor that the signatory Engineer is the Designer of Record of any construction project for which the information is used.
   Rule 61G20-3 (17)(a) Definition: Evaluation report means a report based upon testing or comparative or rational analysis, or a combination thereof, from an approved product evaluation entity or a licensed Florida professional engineer or architect indicating that the product was evaluated to be in compliance with the Code or the intent of the Code and that the product complies with the Code or is, for the purpose intended, at least equivalent to that required by the Code.
2. This Evaluation Report expires Dec. 31, 2026, open to renewal. Up to the renewal date, the report is valid until such time as the named product(s) changes, the Quality Assurance Agency changes, or provisions of the Code that relate to the product change.

CERTIFICATION OF INDEPENDENCE

1. Boca Engineering Co., it's employees and shareholders, do not have, nor do they intend to or will acquire, a financial interest in any company manufacturing or distributing products that they evaluate.
2. Boca Engineering Co. is not owned, operated, or controlled by any company manufacturing or distributing products that they evaluate.

Contents

	pg.
Product Evaluation	3
Attachments	6
ATTACHMENT 1: MATERIAL PROPERTIES	6
ATTACHMENT 2: WIND PRESSURE AND WIND SPEED TABLES	7
ATTACHMENT 3: ASSEMBLY DIAGRAMS	14

Product Evaluation

1.0 PRODUCT DESCRIPTION

Davinci roofing is manufactured by injection molding a polymer blend in to individual slates, serving as an exterior roof covering.
DaVinci Province Slate: Each tile is 11 ½-inch long by 12 ½-inch wide, thickness of $^{3}/_{8}$-inch at the head and $^{5}/_{8}$-inch at the tail, weighing 20.6-oz.

1.1 MATERIAL PROPERTIES

The material properties can be found in ATTACHMENT 1: MATERIAL PROPERTIES.

2.0 INSTALLATION

The cladding systems as described in Section 1 shall be installed in accordance with the manufacturer's installation instructions, the 2023 Florida Building Code, and are subject to the Limitations stated within this report.

3.0 CODE SECTIONS REVIEW

FBC Section	Description
1504.3	**Wind Resistance of Nonballasted Roofs** Inspire Classic Slate roofing systems as covered in this report follow installation instructions in accordance with Section 1507 and resist design wind load pressures in accordance with Section 1609. See ATTACHMENT 2: WIND PRESSURE AND WIND SPEED TABLES, Tables 3 – 5 of this report.
1504.3.1	**Wind Uplift Resistance (Non-HVHZ)** DaVinci Province Slate roofing assemblies for non-HVHZ applications have been tested in accordance with UL 1897 to determine the allowable wind uplift pressure, applying a 2:1 margin of safety to tested results per Section 1504.9. See ATTACHMENT 2: WIND PRESSURE AND WIND SPEED TABLES, Tables 3 – 5 of this report.
1504.6	**Physical Properties, Durability** DaVinci Roofing products covered in this report demonstrate physical integrity over the course of 2000 hours of exposure to accelerated weathering tests conducted in accordance with ASTM G155.
1505	**Fire Classification (Non-HVHZ)** See Section 5 of this report.
1515.1.3	**Performance Requirements (HVHZ)** Testing labs as listed in Section 9 of this report are considered to comply with TAS 301 via accreditation by nationally recognized agencies.
1516.1	**Fire Classification (HVHZ)** All roofing assemblies in HVHZ applications require classification to ASTM E108 Class A, B, or C, depending on building occupancy class. Information on Province Slate roofing classified assemblies is in Section 5 of this report.
1523.6.5	**Discontinuous Roofing Systems, Wind Driven Rain (HVHZ)** Province Slate roofing systems covered in this report for HVHZ applications have been tested in compliance with TAS 100 for wind-driven water infiltration resistance.

1523.6.5.2.4.1 Wind Uplift Resistance (HVHZ)
Inspire Classic Slate roofing systems covered in this report for HVHZ applications have been tested in accordance with TAS 125 to determine the allowable wind uplift pressure, applying a 2:1 margin of safety to tested results per Section 1523.4. See ATTACHMENT 2: WIND PRESSURE AND WIND SPEED TABLES, Tables 3 – 5 of this report.

2606.4 Burning Rate
Province Slate roofing covered in this report have been tested to ASTM D635 and qualify as Class CC2.

2606.4 Self-Ignition Temperature
Province Slate roofing products covered in this report have been tested to ASTM D1929 and have self-ignition temperatures greater than 650°F.

2606.4 Smoke Density
Province Slate roofing products covered in this report have been tested to ASTM D2843 and have a smoke density rating less than 75.

2615.2 Weathering (HVHZ)
Inspire Classic roofing products covered in this report have been tested to 4500 hours of accelerated xenon arc weathering exposure in compliance with ASTM G155.

2615.2 Tensile Strength after Weathering (HVHZ)
After 4500 hours of accelerated weathering exposure Province Slate roofing materials, tested to ASTM D638, loss of tensile strength yield does not exceed 10%.

FBC-R Section	Description

R902.1 Fire Classification
See Section 5 of this report.

R904.3 Material Specifications and Physical Characteristics
See ATTACHMENT 1: MATERIAL PROPERTIES, Table 1.

R905.1 Roof Covering Application
Allowable wind pressure values published in this report may be used with Tables R301.2(2) and R301.2(3) for roofs using an effective wind area of 10 square feet.

R4402.1 Roof Assemblies and Rooftop Structures (HVHZ)
Province Slate roofing systems as covered in this report comply with HVHZ applications as prescribed in FBC Chapter 15.

R4412.1 Plastics (HVHZ)
Province Slate roofing systems as covered in this report comply with HVHZ applications as prescribed in FBC Chapter 26.

4.0 LIMITATIONS:

1. This Evaluation is for the base code requirements of the building system as addressed in this report. In some building applications, additional performance objectives may be required by Code which must be addressed in the building design for those specific cases.
2. Design calculations, drawings, and special inspections are to be furnished for building projects by registered professionals as required by the respective jurisdictional authorities and Codes.
3. The installation details for each roof assembly evaluated for determining the maximum design wind uplift pressure are described in Tables 3 – 5 and are limited to those prescribed conditions.
4. Materials used as components in the roof assembly shall comply with the FBC, and where necessary possess the required product approval certification and labeling.
5. Province Slate roofing products are for installation and fastening into wood-based solid sheathing, in accordance with this report.
6. Building framing and roof sheathing must be designed and installed in accordance with Code for capability of supporting the imposed loads, including but not limited to positive and negative wind loads.
7. The allowable negative wind pressures for roofing shown in Tables 3 – 5 must not exceed the design negative wind pressures determined in accordance with Chapter 16 of the FBC or Section R301.2.1.1 of the FBC-R.

5.0 FIRE CLASSIFICATION

Summary of fire performance classifications found by testing to code referenced standards:
ASTM D635: Burning Rate: 0.6 in/min
ASTM D1929: Self-Ignition Temperature: 747 ◦F
ASTM D2843: Smoke Density: 8%
ASTM E108: Where roof assembly fire classification of Class A, B, or C is required, Westlake DaVinci Roofscapes' listed assemblies by QAI Laboratories may be found at https://qai.org/directory/ and shall be verified for each installation by the authority having jurisdiction.

6.0 QUALITY ASSURANCE ENTITY

The products evaluated in this report are surveyed at the approved manufacturing locations with third-party quality assurance inspections and product certification labeling by QAI Laboratories.

7.0 MANUFACTURING PLANTS

The manufacturing plants of roofing materials covered in this evaluation report are located in: Lenexa, KS.

8.0 LABELING

Labeling shall be in accordance with the requirements of the FBC, and the Accredited Quality Assurance Agency.

9.0 REFERENCE TESTING AND EVALUATION DOCUMENTS

Entity	Entity Accreditation[1]	Standards	Report No.	Issue Date
PRI	FBC TST5878	ASTM D1929	DRM-054-02-01	2015-11-16
PRI	FBC TST5878	ASTM D2843	DRM-054-02-01	2015-11-16
PRI	FBC TST5878	ASTM D635	DRM-054-02-01	2015-11-16
PRI	FBC TST5878	ASTM D638	DRM-156-02-01	2015-12-02
Intertek	IAS TL-274	ASTM E108	104793286COQ-007 R2	2022-04-13
PRI	FBC TST5878	ASTM G155	DRM-156-02-01	2015-12-02
Intertek	IAS TL-274	TAS 100	105095440COQ-001	2022-06-22

Farabaugh Engineering and Testing Inc.	FBC TST1654	TAS 100	T313-22	2022-10-19
Intertek	IAS TL-274	TAS 125	104793286COQ-004	2022-06-02
Intertek	IAS TL-274	UL 1897	104793286COQ-002	2022-06-02
QAI	FBC QUA7628	Quality Assurance	B0150	2022-05-26

1. Testing, certification, evaluation, and inspection agencies referenced have been verified to be accredited for the applicable scope and to be in good standing in accordance to Rule 61G20-3. All technical reference documents are current as of this date.

– END OF MAIN REPORT BODY –

Attachments

ATTACHMENT 1: MATERIAL PROPERTIES

Table 1: DaVinci Province Slate Material Properties

Property	Standard	Result	Requirement		Compliance
General Material Properties					
Spontaneous Ignition Temperature (◦F)	ASTM D1929	747 ◦F	≤	650	Pass
Linear Burn Rate (in/min)	ASTM D635	0.6 in/min	≤	2.5	Pass
Average Smoke Density (%)	ASTM D2843	8 %	≤	75	Pass
Smoke Developed Index	ASTM E84	400	≤	450	Pass
Tensile Strength (psi)	ASTM D638	1115 psi	Report Value		Pass
Tensile Strength After Heat Aging for 60 days at 176 ◦F Temperature (% of As Received)	ASTM D638	99 %	≥	80[2]	Pass
Flexural Strength after 5000-hrs of Accelerated Weathering (% of As Received)	ASTM G155 ASTM D790	96 %	≥	90[2]	Pass
Roof Assembly Tests, Regional Codes[1]					
Florida High Velocity Hurricane Zone (HVHZ) Maximum Uplift Resistance (psf)	TAS 125	Uplift design pressure values (ASD) of 92–211 psf, dependent on assembly details and installation conditions			
Florida High Velocity Hurricane Zone (HVHZ) Wind and Wind Driven Rain Resistance (mph)	TAS 100	No shingle displacement or water infiltration on airflow velocity from 35-110 mph, dependent on assembly details and installation conditions			
Roof Assembly Tests, Performance Values[1]					
Wind Uplift Resistance (psf)	UL 1897	Allowable (ASD) values of 62 – 155 psf, dependent on assembly details and installation conditions			
Wind Speed Resistance (mph)	ASCE7	V_{ULT} 105 – 210 mph at heights of 15 – 60 ft, dependent on assembly details and installation conditions			
Fire Classification	ASTM E108	Class A, B or C			
Impact Resistance	UL 2218	Class 4			

1. Roof assembly tests results are dependent on installation components and environmental conditions consistent with tested details. See Davinci's document library of Engineering and Certifications reports for further details.
2. Typical acceptable % retention of strength after aging values.

ATTACHMENT 2: WIND PRESSURE AND WIND SPEED TABLES

User's Guide to Province Slate Wind Uplift Tables:

The Province Slate wind uplift pressures and wind speed conversion tables have been developed to assist users in determining appropriate installation details for Province Slate products, roof construction components, building dimension plans, and site and environmental conditions.

Wind speed conversion tables have been prepared following design methodology of ASCE7-22, Ch. 30.3, for low-rise enclosed buildings with maximum height of 60 ft, with topographic and elevation factors set to unity. These settings are typical of many installations, and consistent with the prescriptive approach used in FBC-R Table R301.2(2). All conditions and assembly details must be consistent with Tables 2 – 5 to be considered valid. If the actual site, building dimension or climatic conditions (including the given variables) differ from those prescribed, the allowable pressure values in Table 2 may be used to calculate adjusted wind speed limits.

For building heights over 60 ft, the Allowable Pressure (ASD) values listed in the wind uplift tables may be used by a licensed design professional to calculate ultimate wind speed and/or allowable height, for the given Province Slate product installation detail and building project conditions.

At any building height, when the Allowable Pressure (ASD) has been pre-determined by the designer or building official, the user only needs to check that the installation detail is shown as capable of that pressure or greater.

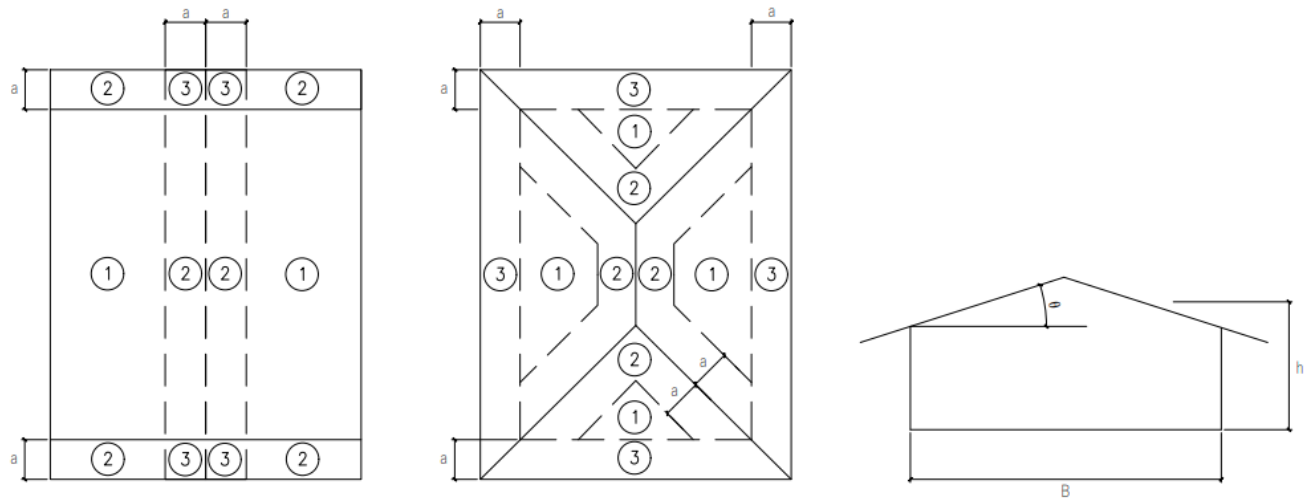

GABLE ROOF PLAN HIP ROOF PLAN ELEVATION

a = 10% of least horizontal dimension or 0.4*h*, whichever is smaller, but not less than either 4% of least horizontal dimension or 3 ft (0.9 m). If an overhang exists, the edge distance shall be measured from the outside edge of the overhang, The horizontal dimensions used to compute the edge distance shall not include any overhang distances.
h = Mean roof height, in ft (m), except that eave height shall be used for θ ≤ 10°.
B = Horizontal dimension of building measured normal to wind direction, in ft (m).
θ = Angle of plane of roof from horizontal, in degrees.

Figure 1: *Wind Pressure Diagrams as Represented in ASCE7-22 for use in conjunction with Tables 2 – 5.*

Table 2: General Attachment Component Details for Use with Tables 3 – 5[1]

ROOFING SHINGLE:	Lists which specific Davinci product the assembly detail applies to.
MAX. SHINGLE EXPOSURE:	Specifies the exposure length of the shingle in inches as the maximum course-to-course spacing.
DECK SHEATHING:	Specifies the type and dimension of the required sheathing for shingle attachment.
SHINGLE FASTENER:	Specifies number and type of fasteners per individual shingle.
ALLOWABLE PRESSURE:	Maximum ASD design pressure in pounds-per-square-foot (psf) for wind uplift.
EXPOSURE CATEGORY:	Terrain wind exposure category defined in ASCE7-22, section 26.7.
SLOPE RANGE:	Slope is shown in Vertical:Horizontal (e.g. 3:12 = 3-inch rise to 12-inch run).
WIND VELOCITY V_{ult}:	Maximum wind velocity (mph) for the respective installation condition.
DECK ATTACHMENT:	In accordance with applicable Code, designed to support the maximum design pressure.
UNDERLAYMENT:	**Non-HVHZ**: minimum underlayment shall be in accordance with FBC 1507.1.1 or any Approved underlayment having current Florida Statewide or Local Product Approval. Per manufacturer's instructions, for roof slopes 3:12 - 4:12 an approved self-adhering underlayment is to be used in all applications. **HVHZ**: For slopes of 3:12 - 4:12: One layer of ASTM D1970 compliant self-adhering underlayment applied over the entire deck surface. **HVHZ**: For slopes greater than 4:12: One layer of ASTM D226 Type 2 underlayment, overlapped 4-inch horizontally and 6-inch at end laps, fastened with 1¼-inch ring-shank nails with 1⅝-inch tin caps at 12-inch o/c in field and 6-inch o/c at overlaps.
VALLEYS:	A full-width sheet of Approved ASTM D1970 self-adhering underlayment centered in the valley, followed by minimum 16-inch wide 28 ga valley metal secured with roofing nails spaced 4-inch o.c., 1-inch from the edge of the metal. An 18-inch strip of ASTM D1970 self-adhered membrane is placed over the edge of the valley metal.
STARTER: **DaVinci Province Slate**	Each Province Starter Slate to be installed extending approximately 1-inch over eaves and ¾-inch over rakes and with a $^{3}/_{8}$-inch gap between starter shingles, adjusted as needed to achieve water-flow into the gutter (if present). Starter tiles are spaced $^{3}/_{8}$ to ½ inch apart and nailed with a minimum of four 11-gage nails as specified.
SHINGLE FASTENING:	Minimum 11 gage (0.12-inch), galvanized or stainless steel annular ring shank nails having not less than 20 rings per inch, heads not less than $^{3}/_{8}$-inch (9.5 mm) in diameter; and lengths sufficient to penetrate through the thickness of plywood panel or wood plank decking not less than $^{3}/_{16}$-inch (4.8 mm), or to penetrate into a 1-inch (25 mm) or greater thickness of lumber not less than 1-inch. All nails shall comply with ASTM F1667, and in HVHZ applications must be listed by a certification agency to the applicable Code.
FASTENING (other):	See Tables for alternate fastening methods.

1. Additional assembly-specific component details are provided for some systems in Tables 2 - 5. The assembly-specific details govern if conflicting with those in Table 1.
2. HVHZ assemblies may also be used in non-HVHZ regions following the same details.

Table 3: Allowable Wind Uplift Pressure Values for Province Slate Roofing Assemblies

System No.	Roof Deck[3,4]	Exposure (inches)	Shingle Fastener[5]	No. Fasteners	Allowable Pressure (ASD) (psf) [1,2]
Non-HVHZ Assemblies					
1	Min. $^{15}/_{32}$-inch plywood	8	1½-inch by 1/8-inch diameter (11 ga) ring-shank hot-dipped galvanized roofing nails with 3/8-inch nominal diameter heads	4	155
2	Min. $^{15}/_{32}$-inch plywood	8	No.10 by 2-inch-long wafer-head galvanized screws	2	126
3	Min. $^{15}/_{32}$-inch plywood	8	1½-inch by 1/8-inch diameter (11 ga) ring-shank hot-dipped galvanized roofing nails with 3/8-inch nominal diameter heads	2	83
4	Min. $^{7}/_{16}$-inch OSB	8	1½-inch by 1/8-inch diameter (11 ga) ring-shank hot-dipped galvanized roofing nails with 3/8-inch nominal diameter heads	4	116
5	Min. $^{7}/_{16}$-inch OSB	8	No.10 by 2-inch-long wafer-head galvanized screws	2	94.5
6	Min. $^{7}/_{16}$-inch OSB	8	1½-inch by 1/8-inch diameter (11 ga) ring-shank hot-dipped galvanized roofing nails with 3/8-inch nominal diameter heads	2	62
HVHZ Assemblies					
7	Min. $^{19}/_{32}$-inch plywood	8	1½-inch by 1/8-inch diameter (11 ga) ring-shank hot-dipped galvanized roofing nails with 3/8-inch nominal diameter heads	4	211
8	Min. $^{19}/_{32}$-inch plywood	8	1½-inch by 1/8-inch diameter (11 ga) ring-shank hot-dipped galvanized roofing nails with 3/8-inch nominal diameter heads	2	92
9	Min. $^{15}/_{32}$-inch plywood (re-roofing)	8	1½-inch by 1/8-inch diameter (11 ga) ring-shank hot-dipped galvanized roofing nails with 3/8-inch nominal diameter heads	4	193

1. To convert to Factored Design Resistance Pressure (psf) (LRFD), multiply Allowable Pressure (psf) (ASD) by 1.67.
2. Allowable pressure (psf) (ASD) represents tested assembly ultimate pressure divided by safety factor of 2.
3. Plywood Sheathing: Min. 0.42 SG, Exposure 1, complying with NIST DOC PS 2. Wood sheathing may be substituted with thicker profile or solid lumber of up to nominal 1-inch.
4. OSB Sheathing: Exposure 1, complying with NIST DOC PS 2. Wood sheathing may be substituted with thicker profile or solid lumber of up to nominal 1-inch.
5. All fasteners are to be corrosion resistant. Nails must comply with ASTM F1667.

General Notes for Tables 4, 5:

1. Table limiting heights and wind velocity values are for low-rise buildings of maximum 60 ft height, developed in accordance with ASCE7-22. Design input values: GC_p = ASCE7-22 Figs 30.3-2(A-I), GC_{pi} = 0.18, K_{zt} = 1, K_d = 0.85, K_e = 1, I_w = 1.0.
2. Wind speed conversion corresponds to the maximum Zone 2/3 or Zone 1 pressure with effective area of 10 ft^2. Table wind speeds are only valid under the design conditions stated. For other site conditions and/or building dimensions, designers can use the published Allowable Pressure (psf) (ASD) to determine wind speeds with FBC-R Table R301.2(2) or calculations to FBC Ch 16.
3. To convert to Factored Design Resistance Pressure (psf) (LRFD), multiply Allowable Pressure (psf) (ASD) by 1.67.
4. Allowable Pressure (psf) (ASD) represents tested assembly ultimate pressure divided by safety factor of 2.
5. Province Slate System No. details as provided in Table 3 of this report.
6. Wind exposure categories as defined in ASCE7-22, Section 26.7.
7. Per figure 1 of this report, Zone 2/3 is the perimeter and corner locations and Zone 1 is the field of the roof. The zone numbers have been simplified for use with this table.
8. Interpolation not permitted. For heights in between those listed, use next highest height column.
9. NA indicates that the installation condition is not acceptable within the design limits of the table.

Table 4: Maximum Wind Speeds of Roof Cladding at Various Building Heights[1,2] – 2023 FBC (Non-HVHZ)

GABLE ROOFS (SLOPE 3:12 - 4.4:12)

System No.[5]	Allowable Pressure (psf) (ASD)[3,4]	Exposure Category[6]	ZONE 2/3 (CORNER/EDGE)[7] Maximum Wind Speed V_{ult} (mph) Building Height (ft)[8,9]							ZONE 1 (FIELD)[7] Maximum Wind Speed V_{ult} (mph) Building Height (ft)[8,9]						
			15	20	25	30	40	50	60	15	20	25	30	40	50	60
1	155	B	210	210	210	210	206	199	195	210	210	210	210	210	210	210
		C	192	187	183	179	174	170	167	210	210	210	210	210	210	210
		D	175	171	167	165	160	157	155	210	210	210	210	210	207	204
2	126	B	210	203	197	191	186	180	175	210	210	210	210	210	210	210
		C	173	168	165	161	157	153	150	210	210	210	210	206	202	198
		D	157	154	151	148	145	142	140	207	202	199	195	190	187	184
3	83	B	172	165	160	155	151	146	142	210	210	210	204	199	192	187
		C	141	137	134	131	127	124	122	185	180	176	173	167	164	161
		D	128	125	123	120	117	115	113	168	164	161	159	155	152	149
4	116	B	203	195	189	183	178	172	168	210	210	210	210	210	210	210
		C	166	162	158	155	150	147	144	210	210	208	204	198	193	190
		D	151	148	145	142	139	136	134	199	194	191	187	183	179	176
5	94.5	B	183	176	170	165	161	156	152	210	210	210	210	210	205	200
		C	150	146	143	140	136	133	130	198	192	188	184	179	175	171
		D	136	133	131	128	125	123	121	180	175	172	169	165	162	159
6	62	B	148	142	138	134	130	126	123	195	187	182	176	172	166	162
		C	122	118	116	113	110	107	105	160	156	152	149	145	141	139
		D	110	108	106	NA	NA	NA	NA	145	142	139	137	134	131	129

GABLE ROOFS (SLOPE 4.5:12 – 6.1:12)

System No.[5]	Allowable Pressure (psf) (ASD)[3,4]	Exposure Category[6]	ZONE 2/3 (CORNER/EDGE)[7] Maximum Wind Speed V_{ult} (mph) Building Height (ft)[8,9]							ZONE 1 (FIELD)[7] Maximum Wind Speed V_{ult} (mph) Building Height (ft)[8,9]						
			15	20	25	30	40	50	60	15	20	25	30	40	50	60
1	155	B	210	210	210	210	210	210	210	210	210	210	210	210	210	210
		C	210	204	199	195	189	185	182	210	210	210	210	210	210	210
		D	190	186	183	179	175	171	169	210	210	210	210	210	210	210
2	126	B	210	210	210	208	203	196	191	210	210	210	210	210	210	210
		C	189	184	180	176	171	167	164	210	210	210	210	210	210	210
		D	172	168	165	162	158	155	152	210	210	210	210	210	210	209
3	83	B	187	180	174	169	164	159	155	210	210	210	210	210	210	210
		C	153	149	146	143	139	135	133	210	205	201	197	191	186	183
		D	139	136	134	131	128	125	124	192	187	184	181	176	173	170
4	116	B	210	210	206	200	194	188	183	210	210	210	210	210	210	210
		C	181	176	172	169	164	160	157	210	210	210	210	210	210	210
		D	165	161	158	155	151	148	146	210	210	210	210	208	204	201
5	94.5	B	200	192	186	180	175	170	166	210	210	210	210	210	210	210
		C	164	159	156	152	148	145	142	210	210	210	210	204	199	195
		D	149	145	143	140	137	134	132	205	200	196	193	188	184	181
6	62	B	162	155	150	146	142	137	134	210	210	207	201	195	189	185
		C	133	129	126	123	120	117	115	182	177	173	170	165	161	158
		D	120	118	115	113	111	108	107	166	162	159	156	152	149	147

Table 4 Continued: Maximum Wind Speeds of Roof Cladding at Various Building Heights[1,2] – 2023 FBC (Non-HVHZ)

GABLE ROOFS (SLOPE 6.2:12 – 12:12)

System No.[5]	Allowable Pressure (psf) (ASD)[3,4]	Exposure Category[6]	ZONE 2/3 (CORNER/EDGE)[7] Maximum Wind Speed V_{ult} (mph) Building Height (ft)[8,9]							ZONE 1 (FIELD)[7] Maximum Wind Speed V_{ult} (mph) Building Height (ft)[8,9]						
			15	20	25	30	40	50	60	15	20	25	30	40	50	60
1	155	B	210	210	210	210	210	210	210	210	210	210	210	210	210	210
		C	210	210	210	210	206	202	198	210	210	210	210	210	210	210
		D	207	203	199	195	191	187	184	210	210	210	210	210	210	210
2	126	B	210	210	210	210	210	210	208	210	210	210	210	210	210	210
		C	206	200	196	192	186	182	179	210	210	210	210	210	210	208
		D	187	183	179	176	172	168	166	210	210	209	205	200	196	193
3	83	B	204	196	190	184	179	173	169	210	210	210	210	208	202	197
		C	167	162	159	156	151	148	145	194	189	185	181	176	172	169
		D	152	148	146	143	139	137	135	177	172	169	166	162	159	157
4	116	B	210	210	210	210	210	205	200	210	210	210	210	210	210	210
		C	197	192	188	184	179	174	171	210	210	210	210	208	203	199
		D	179	175	172	169	165	162	159	209	204	200	197	192	188	185
5	94.5	B	210	209	202	196	191	185	180	210	210	210	210	210	210	210
		C	178	173	170	166	161	157	155	207	202	197	193	187	183	180
		D	162	158	155	153	149	146	144	188	184	181	178	173	170	167
6	62	B	176	169	164	159	155	150	146	205	197	191	185	180	174	170
		C	144	140	137	134	131	127	125	168	163	160	156	152	148	146
		D	131	128	126	124	121	118	116	153	149	146	144	140	137	135

HIP ROOFS (SLOPE 3:12 – 4.4:12)

System No.[5]	Allowable Pressure (psf) (ASD)[3,4]	Exposure Category[6]	ZONE 2/3 (CORNER/EDGE)[7] Maximum Wind Speed V_{ult} (mph) Building Height (ft)[8,9]							ZONE 1 (FIELD)[7] Maximum Wind Speed V_{ult} (mph) Building Height (ft)[8,9]						
			15	20	25	30	40	50	60	15	20	25	30	40	50	60
1	155	B	210	210	210	210	210	210	210	210	210	210	210	210	210	210
		C	210	210	210	209	203	198	194	210	210	210	210	210	210	210
		D	204	199	195	192	187	183	181	210	210	210	210	210	210	210
2	126	B	210	210	210	210	210	210	205	210	210	210	210	210	210	210
		C	202	196	192	188	183	178	175	210	210	210	210	210	210	208
		D	184	179	176	173	169	165	163	210	210	209	205	200	196	193
3	83	B	200	192	186	181	176	170	166	210	210	210	210	208	202	197
		C	164	159	156	153	148	145	142	194	189	185	181	176	172	169
		D	149	146	143	140	137	134	132	177	172	169	166	162	159	157
4	116	B	210	210	210	210	208	201	196	210	210	210	210	210	210	210
		C	194	188	184	181	175	171	168	210	210	210	210	208	203	199
		D	176	172	169	166	162	159	156	209	204	200	197	192	188	185
5	94.5	B	210	205	199	193	188	182	177	210	210	210	210	210	210	210
		C	175	170	166	163	158	155	152	207	202	197	193	187	183	180
		D	159	155	152	150	146	143	141	188	184	181	178	173	170	167
6	62	B	173	166	161	156	152	147	143	205	197	191	185	180	174	170
		C	142	138	135	132	128	125	123	168	163	160	156	152	148	146
		D	129	126	123	121	118	116	114	153	149	146	144	140	137	135

Table 4 Continued: Maximum Wind Speeds of Roof Cladding at Various Building Heights[1,2] – 2023 FBC (Non-HVHZ)

HIP ROOFS (SLOPE 4.5:12 – 6.1:12)

System No.[5]	Allowable Pressure (psf) (ASD)[3,4]	Exposure Category[6]	ZONE 2/3 (CORNER/EDGE)[7] Maximum Wind Speed V_{ult} (mph) Building Height (ft)[8,9]							ZONE 1 (FIELD)[7] Maximum Wind Speed V_{ult} (mph) Building Height (ft)[8,9]						
			15	20	25	30	40	50	60	15	20	25	30	40	50	60
1	155	B	210	210	210	210	210	210	210	210	210	210	210	210	210	210
		C	210	210	210	210	210	210	210	210	210	210	210	210	210	210
		D	210	210	210	210	210	207	204	210	210	210	210	210	210	210
2	126	B	210	210	210	210	210	210	210	210	210	210	210	210	210	210
		C	210	210	210	210	206	202	198	210	210	210	210	210	210	210
		D	207	202	199	195	190	187	184	210	210	210	210	210	210	210
3	83	B	210	210	210	204	199	192	187	210	210	210	210	210	210	210
		C	185	180	176	173	167	164	161	210	210	207	203	197	192	189
		D	168	164	161	159	155	152	149	198	193	190	186	182	178	175
4	116	B	210	210	210	210	210	210	210	210	210	210	210	210	210	210
		C	210	210	208	204	198	193	190	210	210	210	210	210	210	210
		D	199	194	191	187	183	179	176	210	210	210	210	210	210	207
5	94.5	B	210	210	210	210	210	205	200	210	210	210	210	210	210	210
		C	198	192	188	184	179	175	171	210	210	210	210	210	205	201
		D	180	175	172	169	165	162	159	210	206	202	199	194	190	187
6	62	B	195	187	182	176	172	166	162	210	210	210	207	202	195	190
		C	160	156	152	149	145	141	139	188	183	179	175	170	166	163
		D	145	142	139	137	134	131	129	171	167	164	161	157	154	151

HIP ROOFS (SLOPE 6.2:12 - 12:12)

System No.[5]	Allowable Pressure (psf) (ASD)[3,4]	Exposure Category[6]	ZONE 2/3 (CORNER/EDGE)[7] Maximum Wind Speed V_{ult} (mph) Building Height (ft)[8,9]							ZONE 1 (FIELD)[7] Maximum Wind Speed V_{ult} (mph) Building Height (ft)[8,9]						
			15	20	25	30	40	50	60	15	20	25	30	40	50	60
1	155	B	210	210	210	210	210	210	210	210	210	210	210	210	210	210
		C	210	210	210	210	210	205	202	210	210	210	210	210	210	210
		D	210	206	203	199	194	190	187	210	210	210	210	210	210	210
2	126	B	210	210	210	210	210	210	210	210	210	210	210	210	210	210
		C	210	204	199	195	190	185	182	210	210	210	210	210	210	210
		D	191	186	183	180	175	172	169	210	210	210	210	210	210	209
3	83	B	208	199	193	188	182	177	172	210	210	210	210	210	210	210
		C	170	165	162	159	154	150	148	210	205	201	197	191	186	183
		D	155	151	148	146	142	139	137	192	187	184	181	176	173	170
4	116	B	210	210	210	210	210	209	204	210	210	210	210	210	210	210
		C	201	196	191	187	182	178	175	210	210	210	210	210	210	210
		D	183	179	175	172	168	165	162	210	210	210	210	208	204	201
5	94.5	B	210	210	206	200	195	188	184	210	210	210	210	210	210	210
		C	182	177	173	169	164	160	158	210	210	210	210	204	199	195
		D	165	161	158	156	152	149	146	205	200	196	193	188	184	181
6	62	B	180	172	167	162	158	153	149	210	210	207	201	195	189	185
		C	147	143	140	137	133	130	128	182	177	173	170	165	161	158
		D	134	131	128	126	123	120	119	166	162	159	156	152	149	147

See General Notes for Tables 4, 5 on page 9 for referenced superscript table notes.

Table 5: Maximum Wind Speeds of Roof Cladding at Various Building Heights[1,2] – 2023 FBC (HVHZ)

GABLE ROOFS (SLOPE 3:12 - 4.4:12)

System No.[5]	Allowable Pressure (psf) (ASD)[3,4]	Exposure Category[6]	ZONE 2/3 (CORNER/EDGE)[7] Maximum Wind Speed V_{ult} (mph) Building Height (ft)[8,9]							ZONE 1 (FIELD)[7] Maximum Wind Speed V_{ult} (mph) Building Height (ft)[8,9]						
			15	20	25	30	40	50	60	15	20	25	30	40	50	60
7	211	C	210	210	210	209	203	198	195	210	210	210	210	210	210	210
		D	204	199	195	192	187	183	181	210	210	210	210	210	210	210
8	92	C	NA	NA	NA	NA	NA	NA	NA	195	190	185	182	176	172	169
		D	NA	NA	NA	NA	NA	NA	NA	177	173	170	167	163	160	157
9	193	C	210	208	204	200	194	189	186	210	210	210	210	210	210	210
		D	195	190	187	184	179	175	173	210	210	210	210	210	210	210

GABLE ROOFS (SLOPE 4.5:12 – 6.1:12)

System No.[5]	Allowable Pressure (psf) (ASD)[3,4]	Exposure Category[6]	ZONE 2/3 (CORNER/EDGE)[7] Maximum Wind Speed V_{ult} (mph) Building Height (ft)[8,9]							ZONE 1 (FIELD)[7] Maximum Wind Speed V_{ult} (mph) Building Height (ft)[8,9]						
			15	20	25	30	40	50	60	15	20	25	30	40	50	60
7	211	C	210	210	210	210	210	210	210	210	210	210	210	210	210	210
		D	210	210	210	209	204	200	197	210	210	210	210	210	210	210
8	92	C	161	157	NA	NA	NA	NA	NA	210	210	210	207	201	196	193
		D	NA	NA	NA	NA	NA	NA	NA	202	197	194	190	185	182	179
9	193	C	210	210	210	210	210	207	203	210	210	210	210	210	210	210
		D	210	207	204	200	195	191	188	210	210	210	210	210	210	210

GABLE ROOFS (SLOPE 6.2:12 – 12:12)

System No.[5]	Allowable Pressure (psf) (ASD)[3,4]	Exposure Category[6]	ZONE 2/3 (CORNER/EDGE)[7] Maximum Wind Speed V_{ult} (mph) Building Height (ft)[8,9]							ZONE 1 (FIELD)[7] Maximum Wind Speed V_{ult} (mph) Building Height (ft)[8,9]						
			15	20	25	30	40	50	60	15	20	25	30	40	50	60
7	211	C	210	210	210	210	210	210	210	210	210	210	210	210	210	210
		D	210	210	210	210	210	210	210	210	210	210	210	210	210	210
8	92	C	176	171	167	164	159	NA	NA	205	199	195	191	185	181	177
		D	160	156	NA	NA	NA	NA	NA	186	182	178	175	171	167	165
9	193	C	210	210	210	210	210	210	210	210	210	210	210	210	210	210
		D	210	210	210	210	210	208	205	210	210	210	210	210	210	210

HIP ROOFS (SLOPE 3:12 – 4.4:12)

System No.[5]	Allowable Pressure (psf) (ASD)[3,4]	Exposure Category[6]	ZONE 2/3 (CORNER/EDGE)[7] Maximum Wind Speed V_{ult} (mph) Building Height (ft)[8,9]							ZONE 1 (FIELD)[7] Maximum Wind Speed V_{ult} (mph) Building Height (ft)[8,9]						
			15	20	25	30	40	50	60	15	20	25	30	40	50	60
7	211	C	210	210	210	210	210	210	210	210	210	210	210	210	210	210
		D	210	210	210	210	210	210	210	210	210	210	210	210	210	210
8	92	C	173	168	164	161	156	NA	NA	205	199	195	191	185	181	177
		D	157	NA	NA	NA	NA	NA	NA	186	182	178	175	171	167	165
9	193	C	210	210	210	210	210	210	210	210	210	210	210	210	210	210
		D	210	210	210	210	209	205	201	210	210	210	210	210	210	210

Table 5 Continued: Maximum Wind Speeds of Roof Cladding at Various Building Heights[1,2] – 2023 FBC (HVHZ)

HIP ROOFS (SLOPE 4.5:12 – 6.1:12)																	
System No.[5]	Allowable Pressure (psf) (ASD)[3,4]	Exposure Category[6]	ZONE 2/3 (CORNER/EDGE)[7]							ZONE 1 (FIELD)[7]						
			Maximum Wind Speed V_{ult} (mph)							Maximum Wind Speed V_{ult} (mph)						
			Building Height (ft)[8,9]							Building Height (ft)[8,9]						
			15	20	25	30	40	50	60	15	20	25	30	40	50	60
7	211	C	210	210	210	210	210	210	210	210	210	210	210	210	210	210
		D	210	210	210	210	210	210	210	210	210	210	210	210	210	210
8	92	C	195	190	185	182	176	172	169	210	210	210	210	207	202	199
		D	177	173	170	167	163	160	157	208	203	200	196	191	187	185
9	193	C	210	210	210	210	210	210	210	210	210	210	210	210	210	210
		D	210	210	210	210	210	210	210	210	210	210	210	210	210	210

HIP ROOFS (SLOPE 6.2:12 - 12:12)																	
System No.[5]	Allowable Pressure (psf) (ASD)[3,4]	Exposure Category[6]	ZONE 2/3 (CORNER/EDGE)[7]							ZONE 1 (FIELD)[7]						
			Maximum Wind Speed V_{ult} (mph)							Maximum Wind Speed V_{ult} (mph)						
			Building Height (ft)[8,9]							Building Height (ft)[8,9]						
			15	20	25	30	40	50	60	15	20	25	30	40	50	60
7	211	C	210	210	210	210	210	210	210	210	210	210	210	210	210	210
		D	210	210	210	210	210	210	210	210	210	210	210	210	210	210
8	92	C	179	174	170	167	162	158	NA	210	210	210	207	201	196	193
		D	163	159	156	NA	NA	NA	NA	202	197	194	190	185	182	179
9	193	C	210	210	210	210	210	210	210	210	210	210	210	210	210	210
		D	210	210	210	210	210	210	209	210	210	210	210	210	210	210

See General Notes for Tables 4, 5 on page 9 for referenced superscript table notes.

ATTACHMENT 3: ASSEMBLY DIAGRAMS

Begins next page.

DAVINCI PROVINCE SLATE ROOFING
DETAILS OF 2023 FBC WIND LOAD RESISTANCE ASSEMBLIES

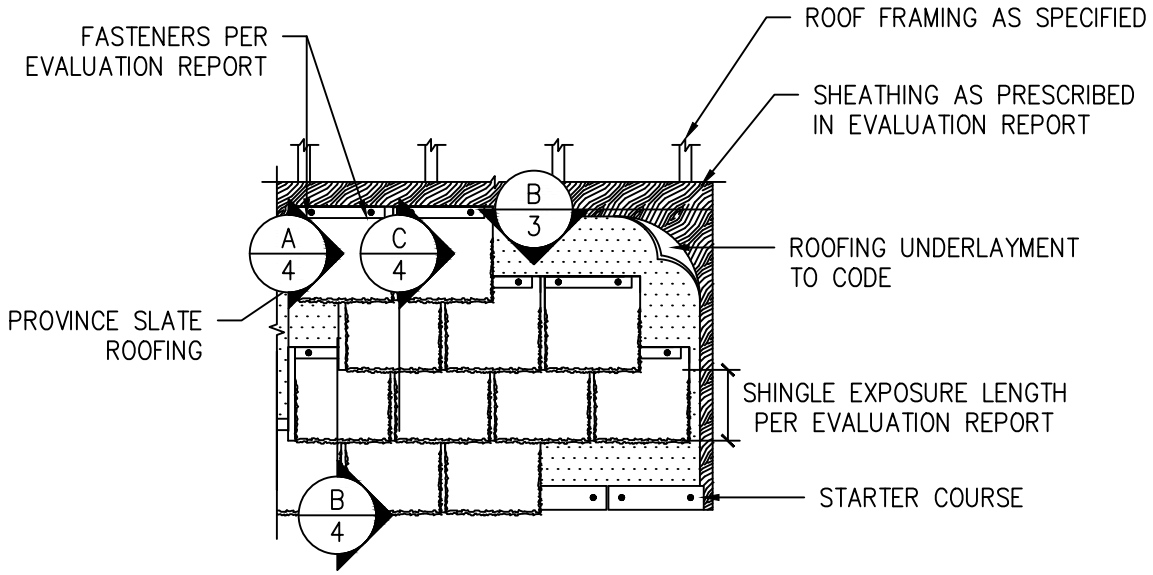

A/1 PROVINCE SLATE ROOFING INSTALLATION

PLAN VIEW NOT-TO-SCALE

DAVINCI PROVINCE SLATE ROOFING DIMENSIONS				
PRODUCT	LENGTHS (IN.)	WIDTH (IN.)	THICKNESS (IN.)	
			HEAD	TAIL
PROVINCE SLATE	11 1/2	12	3/8	5/8

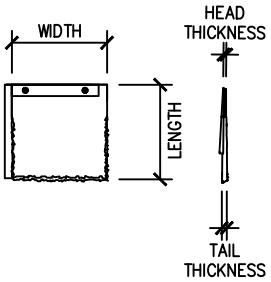

B/1 PROVINCE SLATE ROOFING

ELEVATION VIEW NOT-TO-SCALE

DRAWING FOR DAVINCI ROOFING ENGINEERING EVALUATION REPORT – NOT FOR USE AS CONSTRUCTION DESIGN DOCUMENTS

COPYRIGHT © 2023 RESERVED. THESE PLANS AND DESIGNS ARE AT ALL TIMES THE PROPERTY OF BOCA ENGINEERING TO BE USED FOR THE PROJECT SHOWN. WRITTEN CONSENT IS REQUIRED FROM THE ENGINEER BEFORE ANY REPRODUCTION.

REV	DATE	ISSUE	APP
0	2023/09/19	FOR PUBLICATION	CB

CLIENT:	PROJECT:	TITLE:	DRAWING NO.	SHEET NO.	DES
WESTLAKE DAVINCI ROOFSCAPES, LLC	DAVINCI PROVINCE SLATE ROOFING	GENERAL INSTALLATION DETAILS	0064-31-1-5916	1 OF 5	CB
			DATE: SEPTEMBER 19, 2023		DRN: NN
					CHK: CB

DAVINCI PROVINCE SLATE ROOFING
DETAILS OF 2023 FBC WIND LOAD RESISTANCE ASSEMBLIES

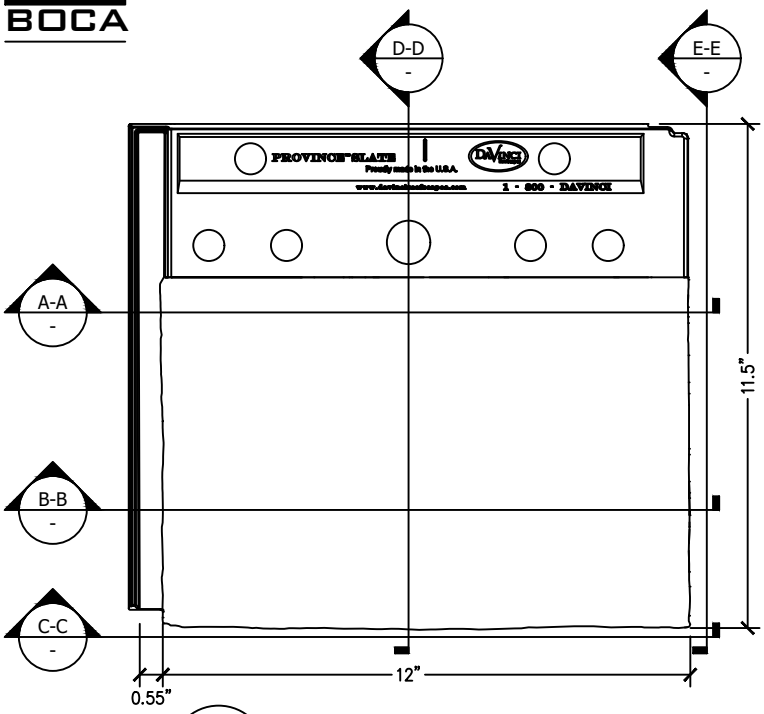

A / 2 PROVINCE SLATE ROOFING
FRONT ELEVATION VIEW TO SCALE

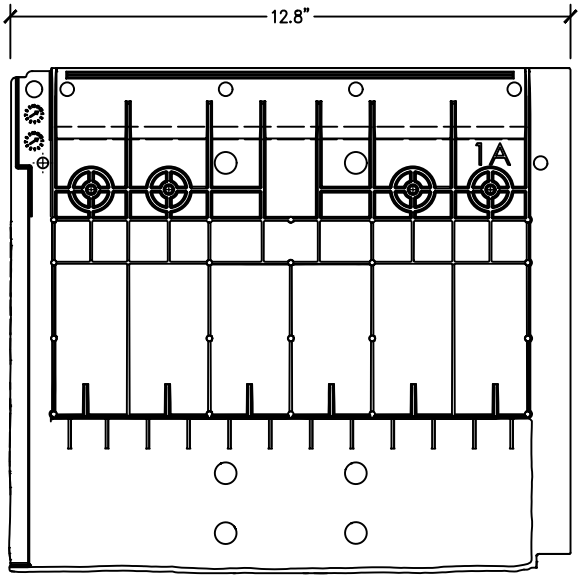

B / 2 PROVINCE SLATE ROOFING
BACK ELEVATION VIEW TO SCALE

SECTION A–A

SECTION B–B

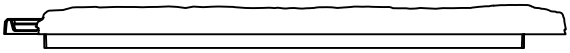

SECTION C–C

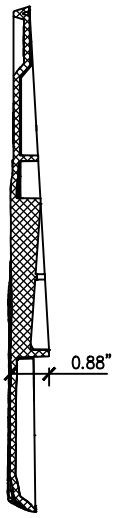

SECTION D–D

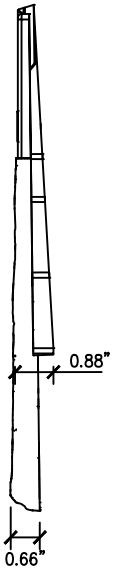

SECTION E–E

DRAWING FOR DAVINCI ROOFING ENGINEERING EVALUATION REPORT – NOT FOR USE AS CONSTRUCTION DESIGN DOCUMENTS

COPYRIGHT © 2023 RESERVED. THESE PLANS AND DESIGNS ARE AT ALL TIMES THE PROPERTY OF BOCA ENGINEERING TO BE USED FOR THE PROJECT SHOWN. WRITTEN CONSENT IS REQUIRED FROM THE ENGINEER BEFORE ANY REPRODUCTION.

REV	DATE	ISSUE	APP
0	2023/09/19	FOR PUBLICATION	CB

CLIENT:	PROJECT:	TITLE:	DRAWING NO.	SHEET NO.	DES
WESTLAKE DAVINCI ROOFSCAPES, LLC	DAVINCI PROVINCE SLATE ROOFING	GENERAL INSTALLATION DETAILS	0064–31–1–5916	2 OF 5	CB
			DATE: SEPTEMBER 19, 2023		DRN: NN
					CHK: CB

DAVINCI PROVINCE SLATE ROOFING
DETAILS OF 2023 FBC WIND LOAD RESISTANCE ASSEMBLIES

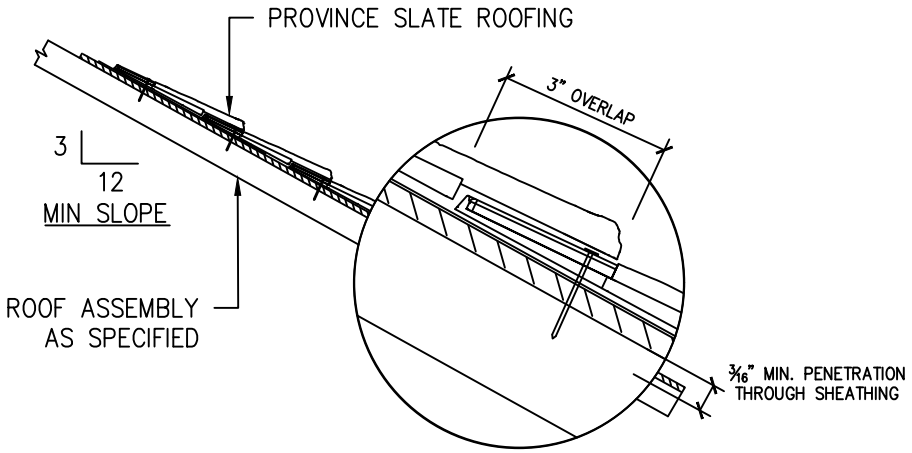

A/3 PROVINCE SLATE ROOFING INSTALLATION
SECTION VIEW NOT-TO-SCALE

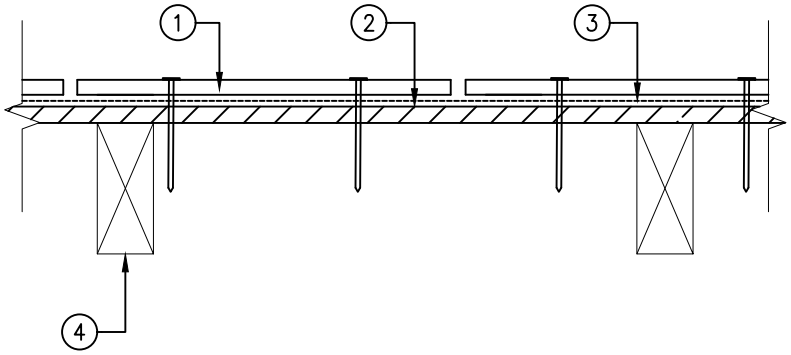

B/3 PROVINCE SLATE ROOFING ON WOOD SHEATHING
SECTION VIEW NOT-TO-SCALE

ROOF FRAMING & WOOD-BASE SHEATHING ASSEMBLY EXTERIOR TO INTERIOR	
1	PROVINCE SLATE ROOFING
2	SHEATHING FASTENED TO FRAMING PER PLANS TO CODE
3	ROOFING UNDERLAYMENT PER PLANS TO CODE
4	ROOF FRAMING PER PLANS, TO CODE

DRAWING FOR DAVINCI ROOFING ENGINEERING EVALUATION REPORT – NOT FOR USE AS CONSTRUCTION DESIGN DOCUMENTS

COPYRIGHT © 2023 RESERVED. THESE PLANS AND DESIGNS ARE AT ALL TIMES THE PROPERTY OF BOCA ENGINEERING TO BE USED FOR THE PROJECT SHOWN. WRITTEN CONSENT IS REQUIRED FROM THE ENGINEER BEFORE ANY REPRODUCTION.

REV	DATE	ISSUE	APP
0	2023/09/19	FOR PUBLICATION	CB

CLIENT:	PROJECT:	TITLE:	DRAWING NO.	SHEET NO.	DES
WESTLAKE DAVINCI ROOFSCAPES, LLC	DAVINCI PROVINCE SLATE ROOFING	GENERAL INSTALLATION DETAILS	0064-31-1-5916	3 OF 5	CB
			DATE: SEPTEMBER 19, 2023		DRN: NN
					CHK: CB

DAVINCI PROVINCE SLATE ROOFING
ROOFING TERMINATION DETAILS

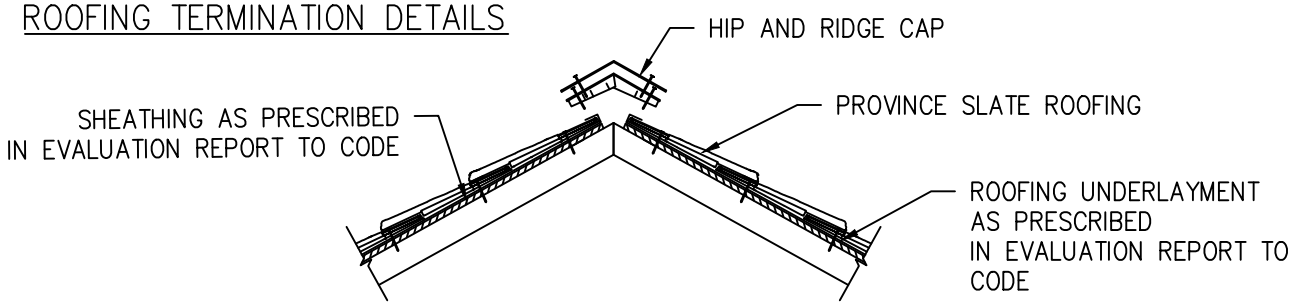

A/4 PROVINCE SLATE HIP AND RIDGE DETAIL
SECTION VIEW NOT-TO-SCALE

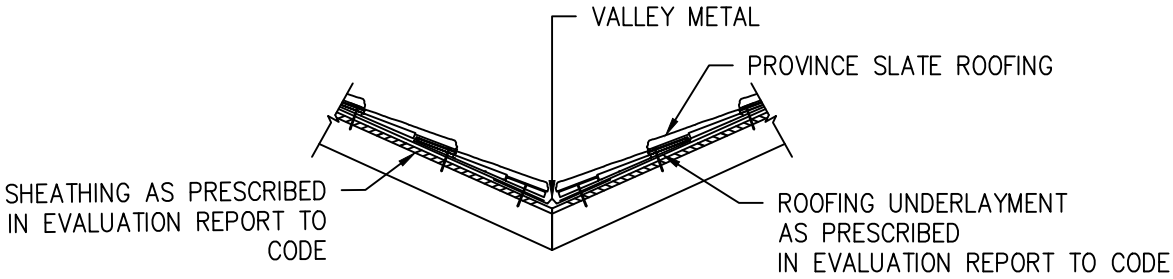

B/4 PROVINCE SLATE VALLEY DETAIL
SECTION VIEW NOT-TO-SCALE

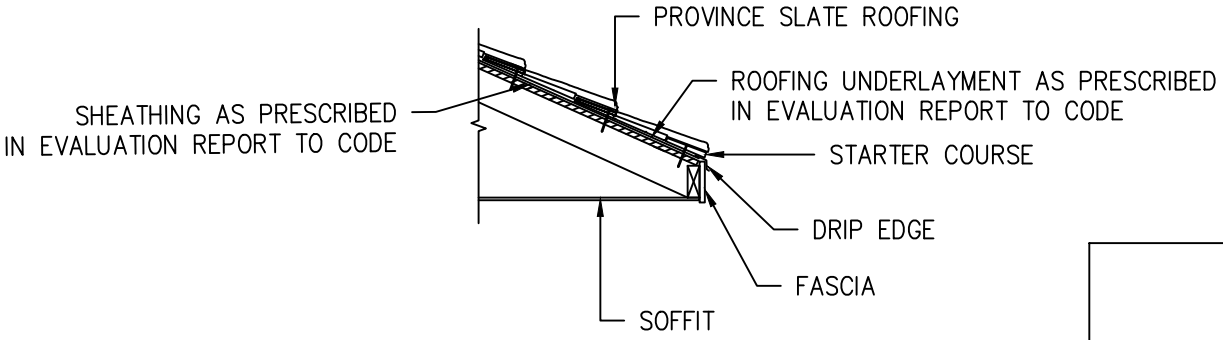

C/4 PROVINCE SLATE EAVE DETAIL
SECTION VIEW NOT-TO-SCALE

NOTES:
1. FLASHING TO CODE (NOT SHOWN) AT ALL PENETRATIONS
2. SEE NOTES ON DRAWING SHEET NO. 5 FOR INFORMATION ON HIP AND RIDGE AND VALLEY DETAILS.

DRAWING FOR DAVINCI ROOFING ENGINEERING EVALUATION REPORT – NOT FOR USE AS CONSTRUCTION DESIGN DOCUMENTS

COPYRIGHT © 2023 RESERVED. THESE PLANS AND DESIGNS ARE AT ALL TIMES THE PROPERTY OF BOCA ENGINEERING TO BE USED FOR THE PROJECT SHOWN. WRITTEN CONSENT IS REQUIRED FROM THE ENGINEER BEFORE ANY REPRODUCTION.

REV	DATE	ISSUE	APP
0	2023/09/19	FOR PUBLICATION	CB

CLIENT:	PROJECT:	TITLE:	DRAWING NO.	SHEET NO.	DES
WESTLAKE DAVINCI ROOFSCAPES, LLC	DAVINCI PROVINCE SLATE ROOFING	GENERAL INSTALLATION DETAILS	0064-31-1-5916	4 OF 5	CB
			DATE: SEPTEMBER 19, 2023		DRN: NN
					CHK: CB

DAVINCI PROVINCE SLATE ROOFING
NOTES FOR WIND LOAD RESISTANCE ASSEMBLIES

LEGEND AND SYMBOLS

A / 1 — DETAIL NUMBER — SHEET DRAWN

A / 1 — SECTION NUMBER — SHEET DRAWN

TESTING AND CODE COMPLIANCE

1. THE SIDING PRODUCT ASSEMBLY SHOWN IS DESIGNED TO COMPLY WITH THE 8TH EDITION (2023) FLORIDA BUILDING CODE (FBC).
2. THE STRUCTURAL FRAMING AND SHEATHING SHALL BE DESIGNED AND ANCHORED TO PROVIDE LATERAL BRACING TO NOT EXCEED DEFLECTION LIMITS, AND PROPERLY TRANSFER ALL LOADS TO THE STRUCTURE. FRAMING DESIGN AND INSTALLATION IS THE RESPONSIBILITY OF THE ENGINEER OR ARCHITECT OF RECORD FOR THE PROJECT OF INSTALLATION.
3. THESE DRAWINGS APPLY TO THE TESTING ASSEMBLY ONLY AND DO NOT IMPLY THAT THE SIGNATORY ENGINEER IS THE DESIGNER OF RECORD FOR ANY FUTURE CONSTRUCTION ON WHICH THEY ARE USED.
4. SOME NON-STRUCTURAL COMPONENTS NOT SHOWN AND DO NOT IMPACT STRENGTH FOR ATTACHMENT. TO BE INSTALLED PER CODE AND MAY INCLUDE: FLASHING, INTERIOR INSULATION, INTERIOR FINISH.

INSTALLATION

THE INSTALLATION DETAILS DESCRIBED ARE OF THE LABORATORY TESTED ASSEMBLY AND MAY NOT REFLECT ACTUAL CONDITIONS FOR A SPECIFIC SITE. IF SITE CONDITIONS DEVIATE FROM THE REQUIREMENTS DETAILED HEREIN, THE LICENSED ENGINEER OR ARCHITECT PREPARED SITE-SPECIFIC DOCUMENTS SHALL BE USED.

SHEATHING

1. WOOD-BASED STRUCTURAL SHEATHING:
   - 1.1. PLYWOOD – US DOC PS1-19 OR PS2-18 U.N.O.
   - 1.2. OSB – US DOC PS2-18 U.N.O.

FASTENERS

1. NAILS TO CONFORM TO ASTM F1667.
2. ALL FASTENERS WITH CORROSION-RESISTANT GALVANIZED COATING.

HIP & RIDGE

ONE PIECE: TILE SHOULD BE INSTALLED AT 12" EXPOSURE. TILE SHOULD BE NAILED ONCE ON EACH SIDE ABOUT ¾" FROM OUTSIDE EDGE WITH APPROVED FASTENER LONG ENOUGH TO PENETRATE THROUGH ROOF DECK AND EXCEED IT BY 3/16". HIP AND RIDGE SHOULD BE NAILED APPROXIMATELY 12½" FROM BUFF OF TILE AND ½" TO ¾" FROM OUTSIDE EDGE.

VALLEYS

A FULL SHEET OF ASTM D1970 SELF-ADHERING UNDERLAYMENT SHOULD BE CENTERED IN VALLEY WITH MIN. 16" WIDE, 28 GA VALLEY METAL NAILED AT 4" O.C AND 1" FROM EDGE OF METAL. AN 18" STRIP OF ASTM D1970 SELF-ADHERING UNDERLAYMENT SHOULD BE PLACED OVER THE EDGE OF THE VALLEY MATAL.

DRAWING FOR DAVINCI ROOFING ENGINEERING EVALUATION REPORT – NOT FOR USE AS CONSTRUCTION DESIGN DOCUMENTS

COPYRIGHT © 2023 RESERVED. THESE PLANS AND DESIGNS ARE AT ALL TIMES THE PROPERTY OF BOCA ENGINEERING TO BE USED FOR THE PROJECT SHOWN. WRITTEN CONSENT IS REQUIRED FROM THE ENGINEER BEFORE ANY REPRODUCTION.

REV	DATE	ISSUE	APP
0	2023/09/19	FOR PUBLICATION	CB

CLIENT:	PROJECT:	TITLE:	DRAWING NO.	SHEET NO.	DES
WESTLAKE DAVINCI ROOFSCAPES, LLC	DAVINCI PROVINCE SLATE ROOFING	GENERAL INSTALLATION DETAILS	0064-31-1-5916	5 OF 5	CB
			DATE: SEPTEMBER 19, 2023		DRN: NN
					CHK: CB